Order code

4V **1** - **10** - **06** - **AC220V**

4V: Solenoid valve(5/2 5/3)
4A: Pneumatic valve(5/2 5/3)

100 Series

Valve type:
10: Single coil double position
20: Double coil double position
30C:Double coil 3 position(closed type)
30E:Double coil 3 position(opened type)
30P:Double coil 3 position(pressure type)

Port size:
05: M5×0.8
0.6: G1/8"

Voltage:
DC12V
DC24V
AC24V 50/60Hz
AC110V 50/60Hz
AC220V 50/60Hz
AC380V 50/60Hz

Specification

Model	4V110-M5	4V120-M5	4V130C-M5	4V130E-M5	4V130P-M5	4V110-06	4V120-06	4V130C-06	4V130E-06	4V130P-06
	4A110-M5	4A120-M5	4A130C-M5	4A130E-M5	4A130P-M5	4A110-06	4A120-06	4A130C-06	4A130E-06	4A130P-06
Medium	Air (to be filtered by 40um filter element)									
Acting type	Piloted									
Valve type	5 port 2 position		5 port 3 position			5 port 2 position		5 port 3 position		
Effective size	10mm² (CV=0.56)		7mm² (CV=0.40)			12mm² (CV=0.67)		9mm² (CV=0.50)		
Port size	In = Out =Exhaust =M5					In=Out=Exhaust=G1/8"				
Lubrication	Not required									
Working pressure	1.7~7.0Kg/cm² (24~100psi)									
Proof pressure	10.5Kgf/cm² (150psi)									
Temperature	5~50℃ (41~122° F)									
Voltage	±10%									
Rated voltage	AC: 1.3VA DC:1.5W									
Insulativity	F class									
Protect	IP65(DIN40050)									
Connect type	Terminal									
Max frequency	5 cycle/sec									
Activating time	0.05 sec									

4V110-06

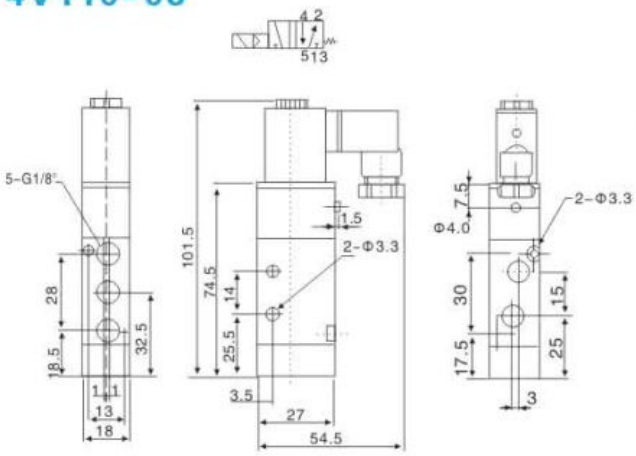

4A110-06

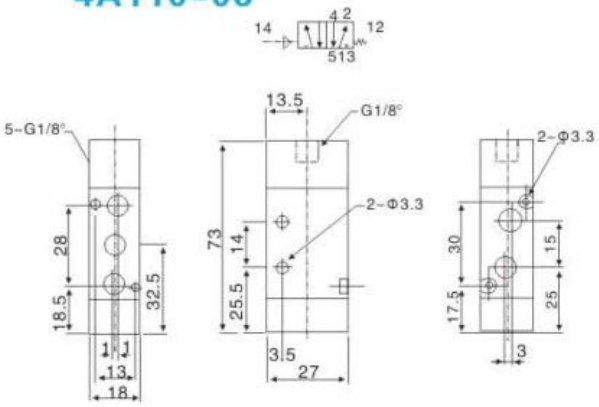

4V120-06

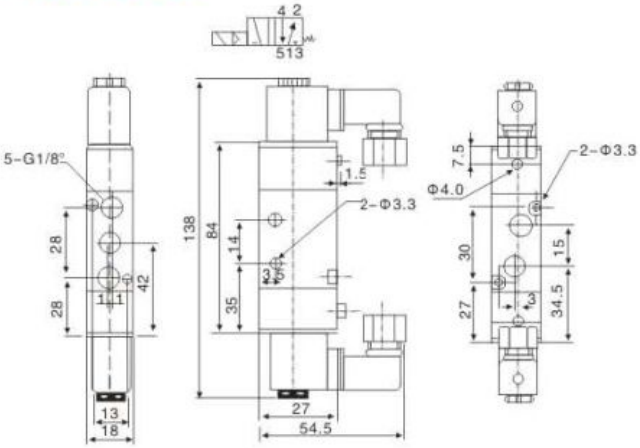

4A110-06

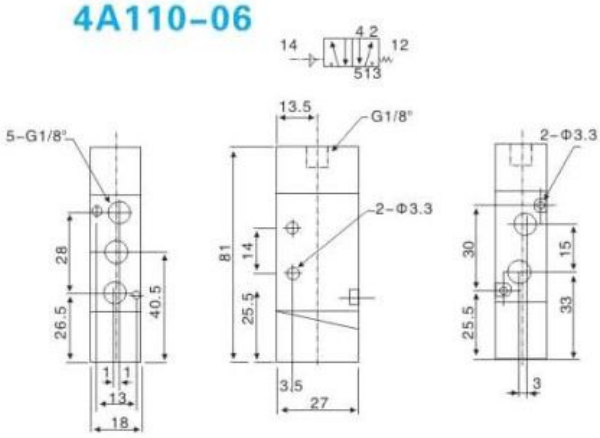

4V130-06

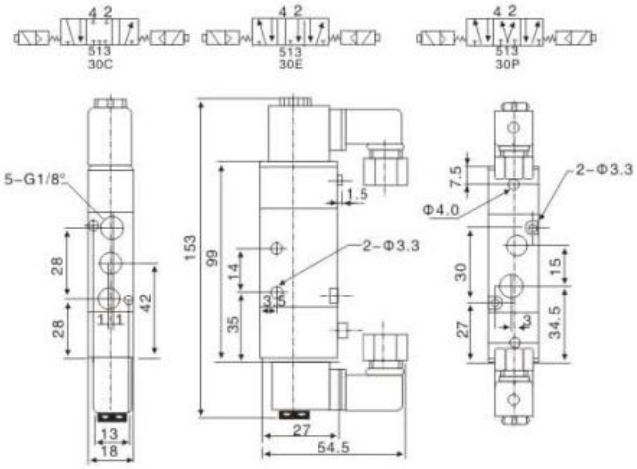
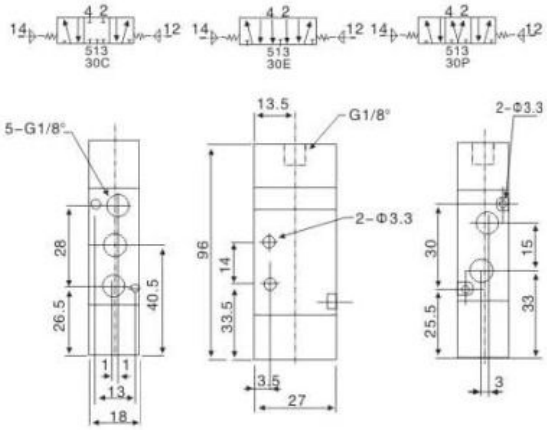
4A130-06